HAIGHT
pump division
DIVISION OF BAKER MANUFACTURING COMPANY
133 Enterprise Street • Evansville, Wi 53536
Phone: 800-871-9250 • Fax: 608-882-3777

8U - 8GPM
UNIVERSAL PUMP W/Relief Valve Revised 2008

8UR- 8GPM HAIGHT RELIEF VALVE PUMP

Item	Part Number	Description	Qty.
1	E90HC.6	Screw, Cover	4
2	ED830A	Cover	1
3	E11F	Bearing	1
4	E21E	Wiper Seal	1
5	E28E	O-Ring, Cover	1
6	ED826F1	Rotor	1
7	ED8C13PK	Shaft & Pinion Assembly	1
8	D814PK	Shaft	1
9	ED815C1	Pinion	1
10	E13C50	Key 1/8 Sq X 1/2 Lg	1
11	E11F2	Bearing	1
12	E49E	Set Screw, Vent	2
13	ED83A7	Case	1
14	E24SE	O-ring-Gland	1

Item	Part Number	Description	Qty.
15	E18E	Shaft Seal	1
19	E22SS3F4	Gland	1
20	SE2018N70	O-Ring, Relief Valve	2
23	E64C	Nut	1
24	E25N1	Sealing Washer	1
25	E55C	Adjusting Screw	1
26	E57C	Bonnet	1
27	SE2020N70	O-Ring, Bonnet	2
28	E52S	Spring	1
29	E51C	Poppet	1
30	E50C	Cap	1
31	ED55A	Relief Valve Housing	1
32	ZA285	Pipe Plug	2
33	E90SC.9	Screw, Relief Valve	4

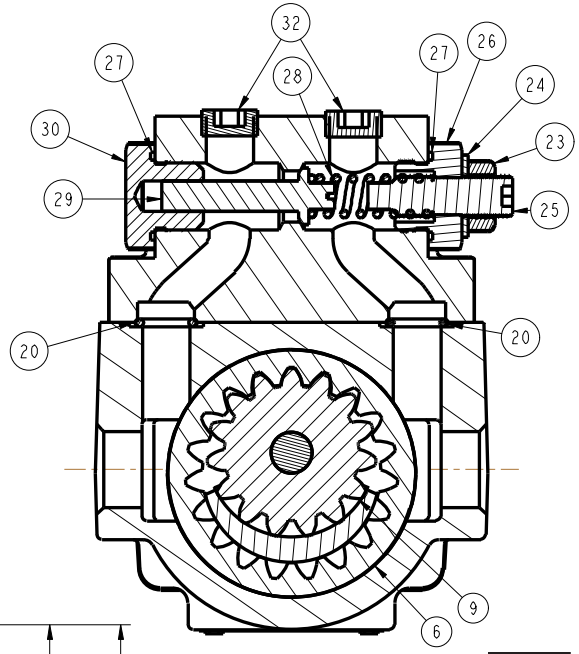

Cutaway View
Back

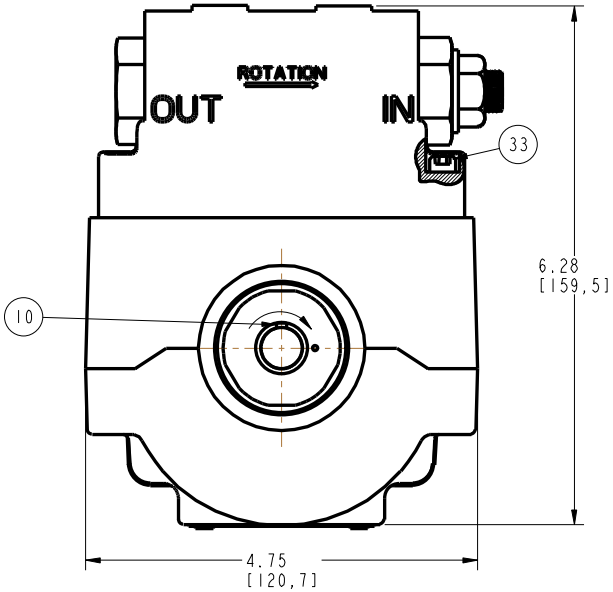

Rotation Arrow Denotes
Standard Clockwise Rotation

Shaft End View

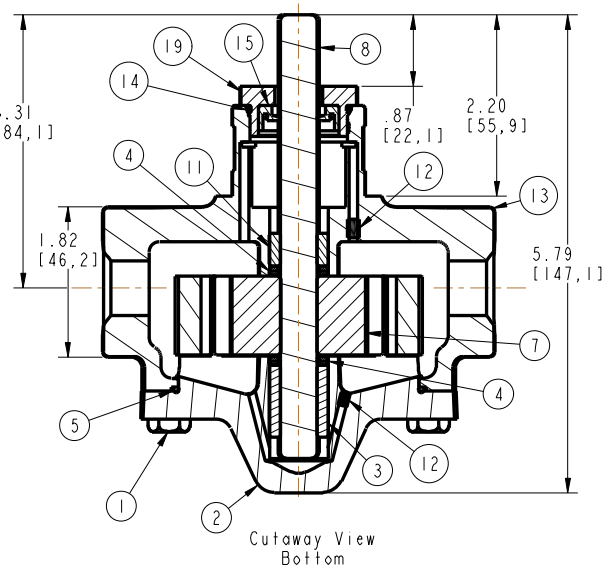

Cutaway View
Bottom

Bracketed Dimensions are mm.

8UR - 8 GPM
Universal Pump W/Relief Valve Revised 2008