HAIGHT® PUMPS
DIVISION OF: BAKER MANUFACTURING CO.,LLC

133 Enterprise Street • Evansville, WI 53536
Phone: 800-871-9250 • Fax: 608-882-3777

70U - 70 GPM
Double Pump w/o Relief Valve

DOUBLE PUMP W/OUT RELIEF VALVE-70 GPM

Item	Part No.	Description	Qty.
1	H90SC.8	Screw, Cover	12
2	F18C75	Drive Key 3/16 Sq X 3/4 Lg	1
3	E49E	Set Screw, Vent	2
4	H11F	Bearing	3
5	EYB1	Eye Bolt	1
6	H28E	O-Ring, Cover	2
7	D403A4	Case	1
8	D70C13D2	Shaft & Pinion Assembly	1
9	D4015C1	Pinion	1
9A	D3015C8	Pinion, Keyed	1
10	D4014MC6	Shaft	1
11	F18C100	Key, 3/16 Sq X 1.00 Lg	1
12	D4026F1	Rotor	1
12A	D3026F1	Rotor	1
13	D3030A8	Cover	1
13A	D4030A8	Cover	1
14	F41C	Pin	2
16	H25C2	Washer	2
18	H11TB2	Thrust Bearing	1
19	F25C2	Washer	1
20	F11TB2	Bearing	1
21	F25C3	Washer	1
22	F25C5	Spherical Washer	1
23	ZA532A	Nut	1
24	F25C4	Spherical Washer	1
25	SE2137N70	O-Ring, Gland	2
26	H22SS2A	Gland	1
27	F22SM2A	Gland	1
28	H18AM	Shaft Seal	1
29	E49D	Set Screw, Gland	1
30	F25C7	Washer	1
31	F43C1	Roll Pin	1
32	SE2122N70	O-Ring, Cover Plate	4
33	D8030CP	Cover Plate	1
34	E90SC.9	Screw, Cover Plate	4

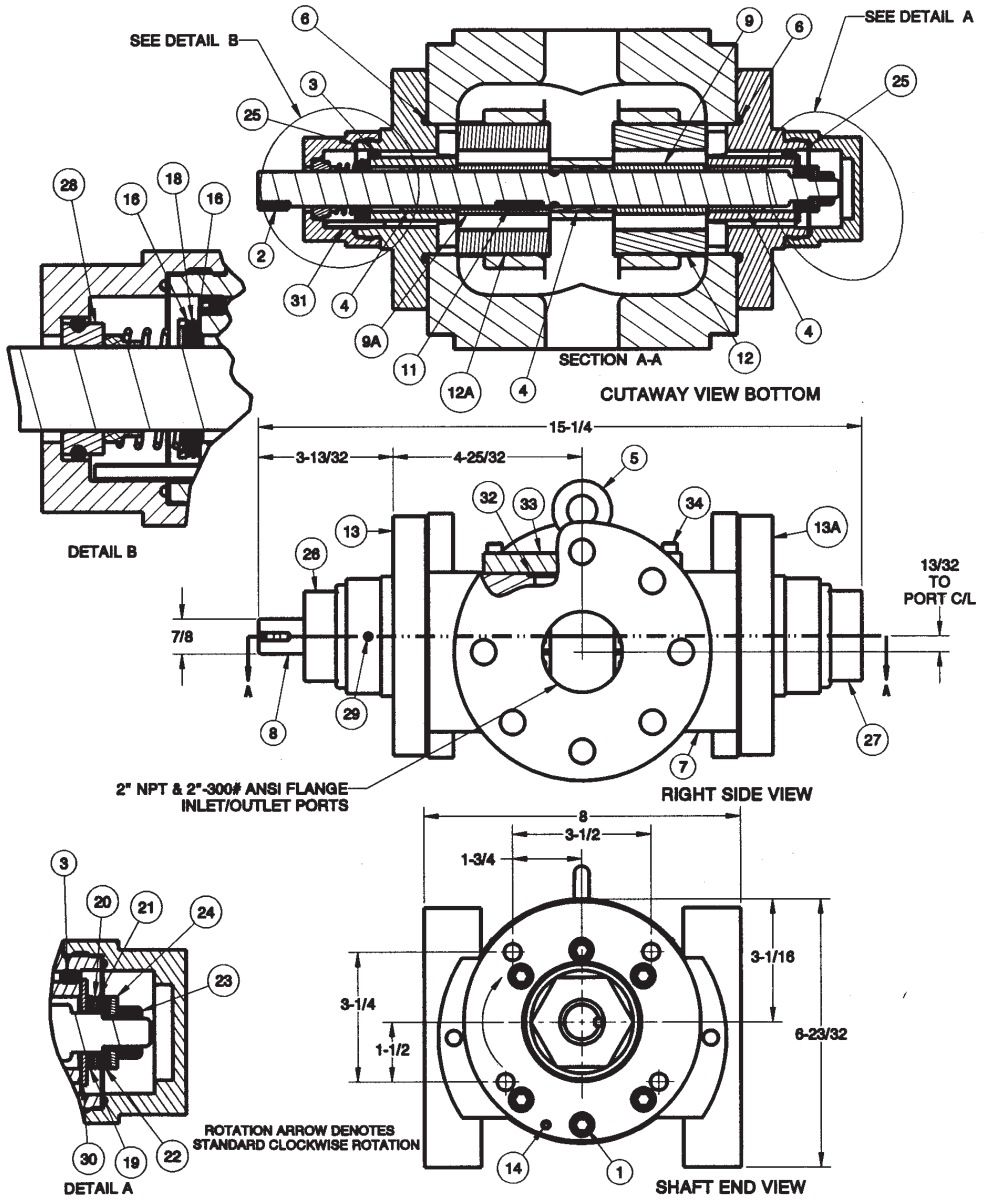

(Revised 3-1-03)

70U - 70 GPM
Double Pump w/o Relief Valve