HAIGHT® PUMPS
DIVISION OF: BAKER MANUFACTURING CO.,LLC

133 Enterprise Street • Evansville, WI 53536
Phone: 800-871-9250 • Fax: 608-882-3777

BS54UR - 54 GPM
Barrier Seal Double Pump w/Relief Valve

BARRIER SEAL PUMP W/RELIEF VALVE- 54 GPM

Item	Part No.	Description	Qty.
1	H90SC.8	Screw, Cover	12
2	F18C75	Drive Key, 3/16 Sq X 3/4 Lg	1
3	E49E	Set Screw, Vent	2
4	H11F	Bearing	3
5	EYB1	Eye Hook	1
6	H28E	O-Ring, Cover	2
7	D403A4	Case	1
8	D44C13D2	Shaft & Pinion Assembly	1
9	D2215C1	Pinion	1
9A	D3015C8	Pinion, Keyed	1
10	D4014MC9	Shaft	1
11	F18C100	Key, 3/16 Sq X 1.00 Lg	1
12	D2226F1	Rotor	1
12A	D3026F1	Rotor	1
13	D3030A8	Cover	1
13A	D2230A8	Cover	1
14	F41C	Pin	2
16	H25C2	Washer	4
17	SE3932N70	O-Ring, Sleeve	2
18	H11TB2	Thrust Bearing	2
19	F25C2	Washer	1
20	F11TB2	Bearing	1
21	F25C3	Washer	1
22	F25C5	Spherical Washer	1

Item	Part No.	Description	Qty.
23	ZA532A	Nut	1
24	F25C4	Spherical Washer	1
25	SE2137N70	O-Ring, Gland	2
26	H22DD2F	Gland	1
27	F22SM2A	Gland	1
28	H18AM	Shaft Seal, Primary	1
29	H18AM	Shaft Seal, Secondary	1
30	F25C7	Washer	1
31	H33RDS	Sleeve	1
32	SE2122N70	O-Ring, Relief Valve	4
35	RVB03	Valve Body	1
37	E90SC2.0	Screw, Valve Body	4
38	RVP04	Valve Piston	1
39	SE2327N70	O-Ring, Valve Piston	1
40	H52E	Spring	1
41	SE2160N70	O-Ring, Valve Cover	1
42	RVC30	Valve Cover	1
43	E90SC1.0	Screw, Valve Cover	4
44	H65C	Pipe Plug	1
45	F55C	Adjustment Screw	1
46	E64C	Lock Nut	1
47	H33SS3F	Gland	1
48	H11TB	Roller Bearing	1
49	H19A	Locking Collar	1

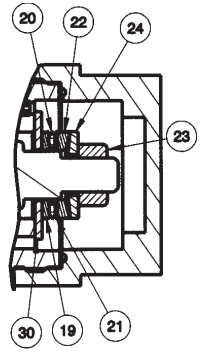

DETAIL A

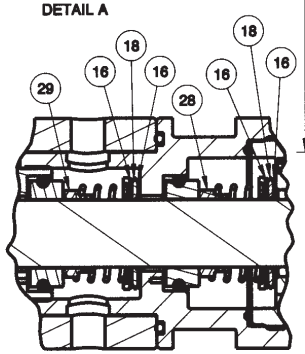

DETAIL B

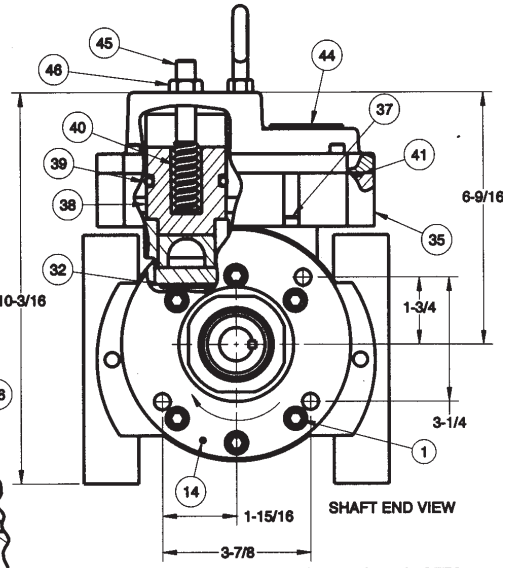

SHAFT END VIEW

ROTATION ARROW DENOTES STANDARD CLOCKWISE ROTATION

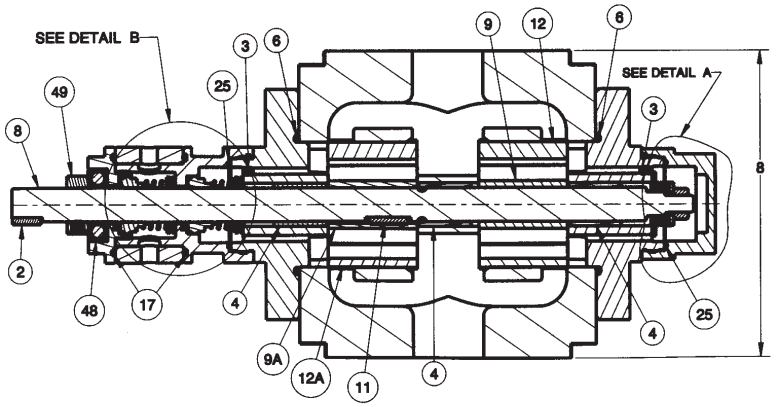

CUTAWAY VIEW BOTTOM

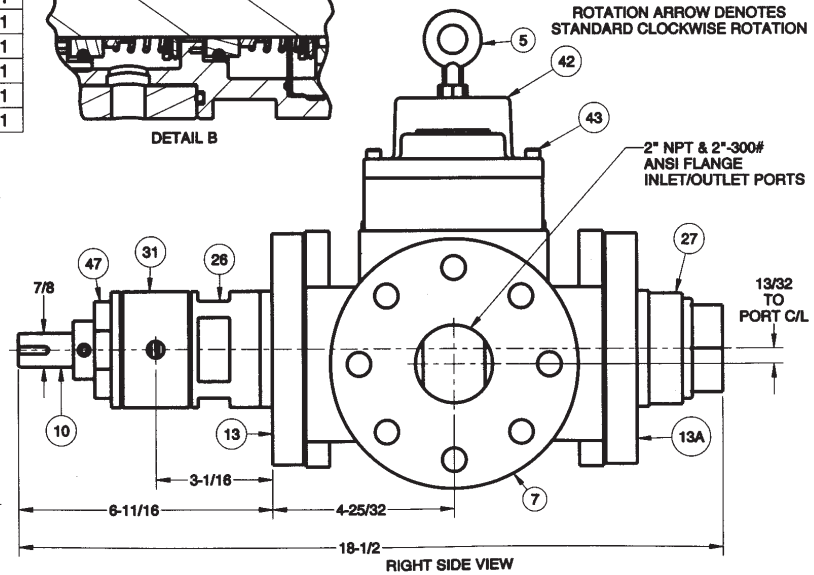

RIGHT SIDE VIEW

BS54UR - 54 GPM
Barrier Seal Double Pump w/Relief Valve

(Revised 1-1-06)