HAIGHT® PUMPS
DIVISION OF: BAKER MANUFACTURING CO.,LLC

133 Enterprise Street • Evansville, WI 53536
Phone: 800-871-9250 • Fax: 608-882-3777

40U - 40 GPM Universal Pump

40U - 40 GPM Universal Pump

Item	Part No.	Description	Qty.
1	SAE16	Screw On Plug	1
2	SE3916N70	O-Ring, Plug	1
4	KR364	Screw, Cover	8
5	D4030A11	Cover	1
6	H11F	Bearing	1
6A	H11F10	Bearing	1
7	H21E	Wiper Seal	2
8	H28E	O-Ring, Cover	1
9	DU40C13MC7	Shaft & Pinion Assembly	1
10	D4015C1	Pinion	1
11	D4014MC7	Shaft	1
12	F18C75	Key, 3/16 Sq X 3/4 Lg	1
13	D4026F1	Rotor	1
14	D403A11L	Case	1
16	H25C2	Washer	1
16A	H25C2	Washer	1
17	H18AM	Shaft Seal	1

Item	Part No.	Description	Qty.
18	H11TB2	Thrust Bearing	1
19	E49E	Set Screw, Vent	2
20	F43C1	Pin	1
21	SE2137N70	O-Ring, Gland	1
22	SE2122N70	O-Ring, Cover Plate	2
23	E90HC.6	Screw, Cover Plate	4
24	D1030CP	Cover Plate	1
37	H22SS2A	Gland	1
38	E49D	Set Screw, Gland	1
39	F25C2	Washer	1
40	F11TB2	Thrust Bearing	1
41	F25C3	Washer	1
42	F25C5	Spherical Washer	1
43	F25C4	Spherical Washer	1
44	ZA532A	Nut	1
45	F41C	Pin	1

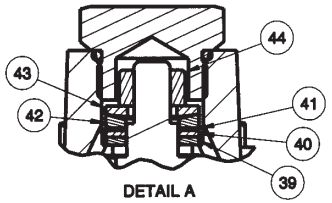

DETAIL A

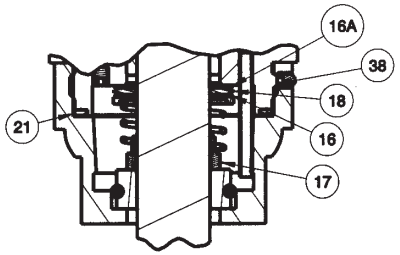

DETAIL B

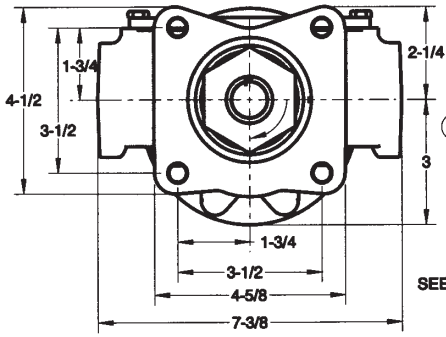

ROTATION ARROW DENOTES STANDARD CLOCKWISE ROTATION

SHAFT END VIEW

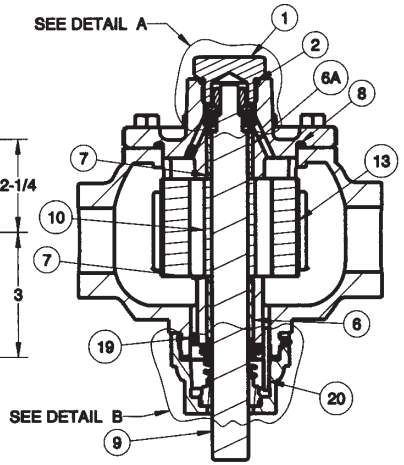

CUTAWAY VIEW BOTTOM

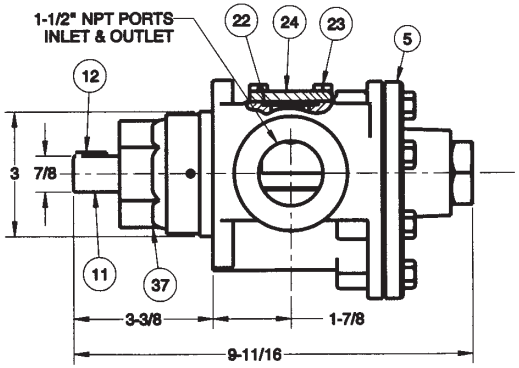

RIGHT SIDE

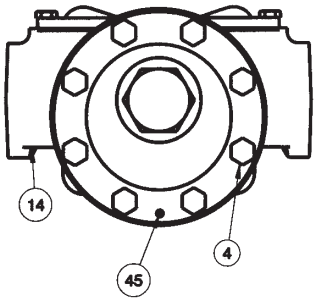

COVER END VIEW

(Revised 1-1-06)