HAIGHT® PUMPS
DIVISION OF: BAKER MANUFACTURING CO.,LLC
133 Enterprise Street • Evansville, WI 53536
Phone: 800-871-9250 • Fax: 608-882-3777

1U - 1 GPM Universal Pump

1U-1 GPM HAIGHT PUMP

Item	Part Number	Description	Qty.
1	E90HC.6	Screw, Cover	4
2	ED130A	Cover	1
3	E11F	Bearing	1
4	E21E	Wiper Seal	1
5	E28E	O-Ring, Cover	1
6	D126F1	Rotor	1
7	D1C13PK	Shaft & Pinion Assembly	1
8	D514PK	Shaft	1
9	D115C1	Pinion	1
10	E13C50	Key 1/8 Sq X 1/2 Lg	1
11	E11F2	Bearing	1
12	E49E	Set Screw, Vent	2
13	ED56A7	Case	1
14	E24SE	O-ring-Gland	1
16	E25C3	Washer	2
17	E18AM	Shaft Seal	1
18	E11TB2	Thrust Bearing	1
19	E22SS3F4	Gland	1
20	SE2018N70	O-Ring, Cover Plate	2
21	ED530CP	Cover Plate	1
22	E90HC.5	Screw, Cover Plate	4
34	E41C	Pin	1

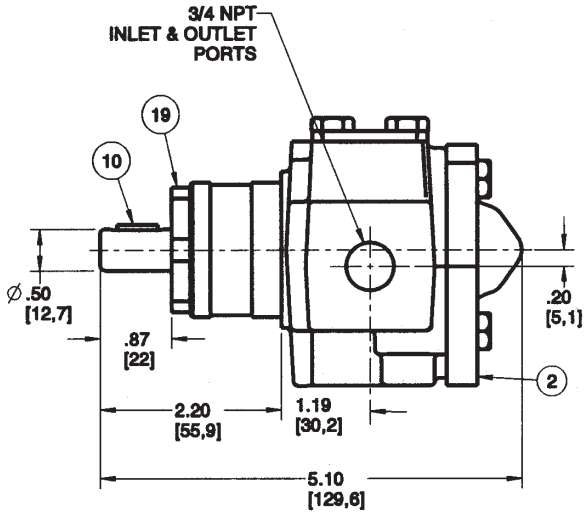

Right Side

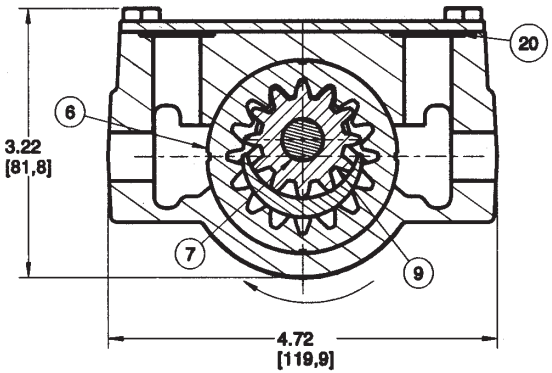

Rotation Arrow Denotes
Standard Clockwise Rotation

Cutaway View
Shaft End

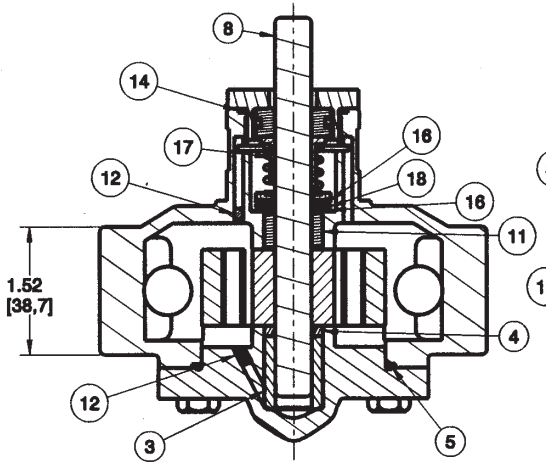

Cutaway View
Top

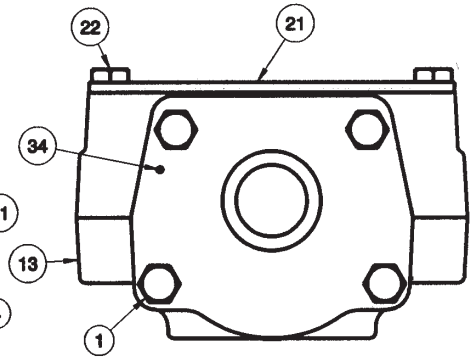

Cover End View

Bracketed Dimensions are mm.

(Revised 3-1-03)